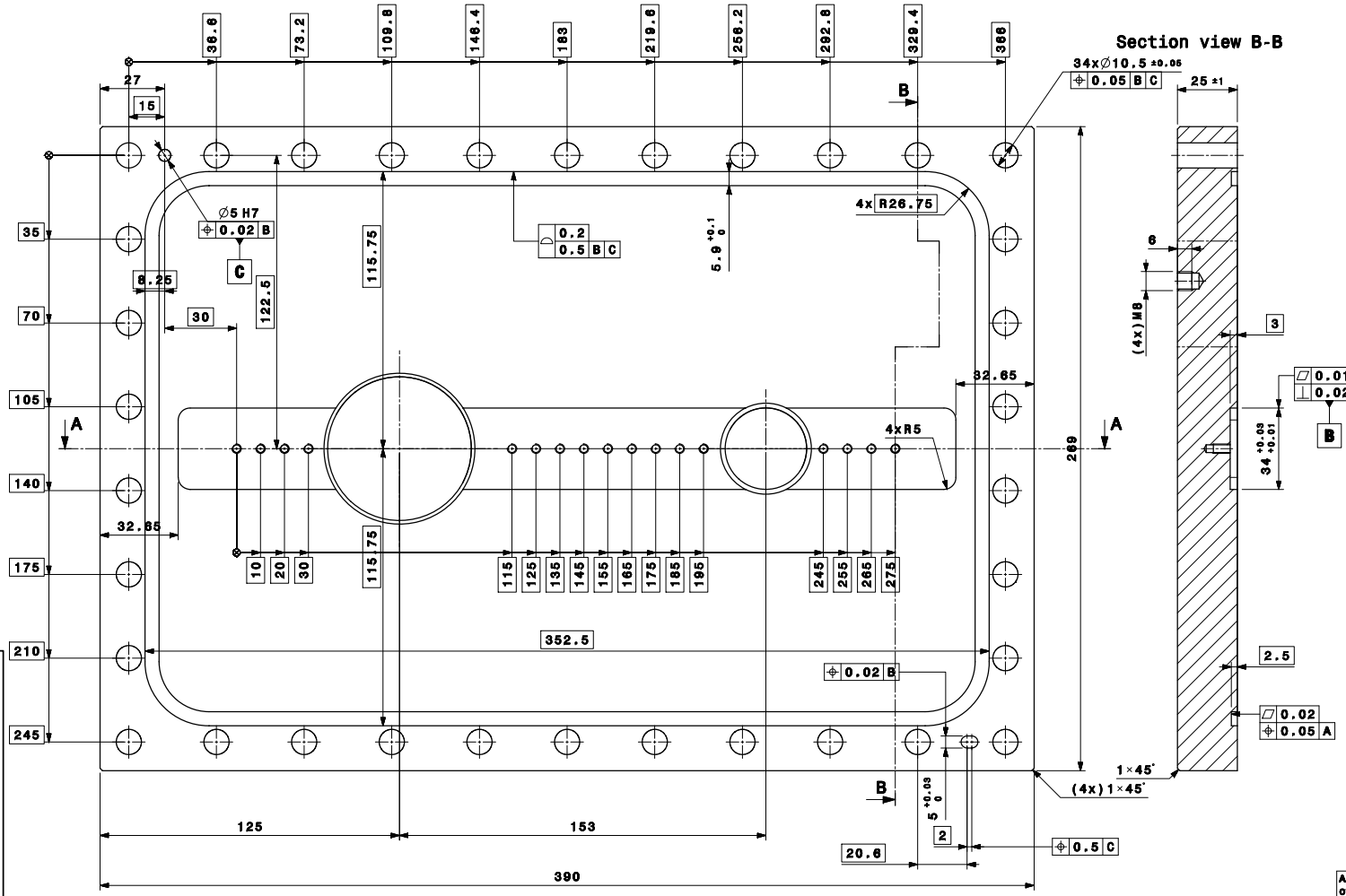

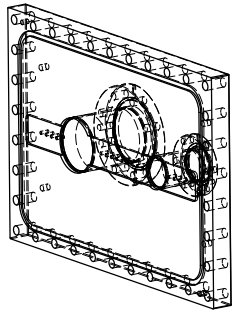

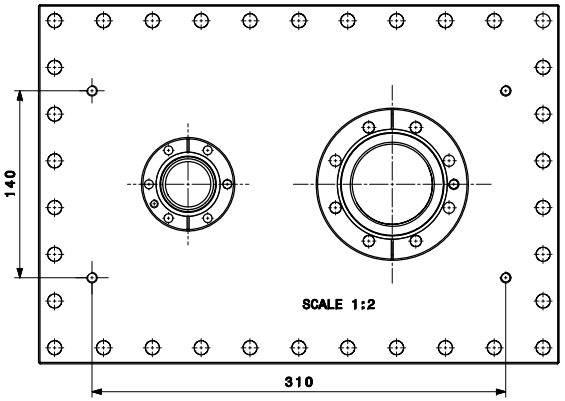

Mass:20kg

All welds must be made using the specified techniques with 100% penetration. Welds and all other surfaces must not be finished by grinding or any other mechanical abrasion. Any part (or component) of the vacuum system showing a room temperature calculated leak rate (localized or global), when measured with a calibrated UHV leak detector, in excess of 1x10-11 Pa.m3.s-1 (1x10-10 mbar.l.s-1) will be considered as unacceptable.

1. Component fabrication (degreasing and welding).
2. Inscribe drawing number on shaded area with an electrical pen.
3. Leak detection, the test report has to be supplied to the AT Vacuum Group.
4. UHV cleaning according to CERN report "procédure qualité": 867.11 (for Stainless steel) or 867.12 (for aluminium and copper). EDMS reference number 798034.

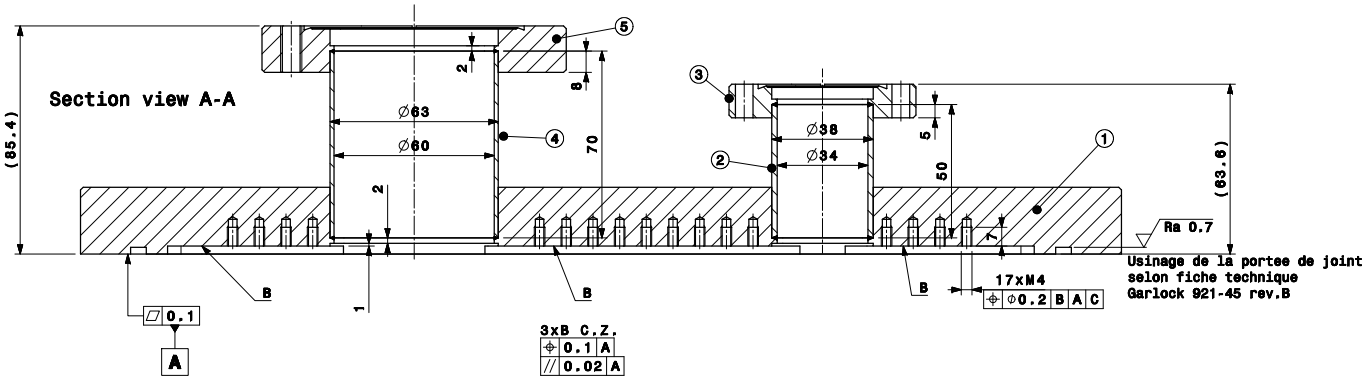

QUA	DESCRIPTION	POS	MAT.	OBSERVATIONS	REF.CERN
1	UHV FLANGE - FCEO 114/60 DIN 10.00.10.010.0	5		STDVFUHV0007	
	-				
1	TUBE DIA. 60/63	4	AISI 316L		39.36.05
					688.2
1	UHV FLANGE - FCEO 70/35 DIN 10.00.00.0	3		STDVFUHV0005	
	-				
1	ROUND TUBE ø 38/34	2	AISI316L		39.36.05
	TUBE ø 38/34		AISI316 L		635.5
1	SHEET - THICKNESS = 25	1	AISI 304L		44.59.33
	TOLE - EPAISSEUR = 25				025.7

EMS/ASS CTFBIFEA0001 S.EMS/S.ASS

ISO 2768-fH | Ra 1.6 | ISO 13715 -0.05 +0.05

Non Intensity Finishes with Energy assessment (version A)

RECTANGULAR FLANGE

DES/DRA.	G.FOFFAND	2009-06-18
CONTROLLED	N.CHRITIN	2009-06-19
RELEASED	R.RUBER	2009-06-26
APPROVED	-	-

SCALE

CTF\BIFEAO\CTFBIFEA0009

REPLACES

RELEASED BY PROJECT ENGINEER | FOR PRODUCTION | QAC – | CTFBIFEA0009 | SIZE 1 | IND.

DIMENSIONS, TOLERANCES ASME Y14.5M 1994
DIMENSIONS ARE IN MILLIMETERS UNLESS OTHERWISE SPECIFIED
DRAWING ISO PROJECTION
PROJECTION

ORGANIZACION EUROPEENNE PARA LA INVESTIGACION NUCLEAR
EUROPEAN ORGANIZATION FOR NUCLEAR RESEARCH
Reproduction, publication and disclosure to third parties without written permission are prohibited. Any infringement will be prosecuted.
Ce document ne peut ni être reproduit ni publié ni divulgué à des tiers sans autorisation écrite. Toute infraction sera poursuivie.