Detector list subblock

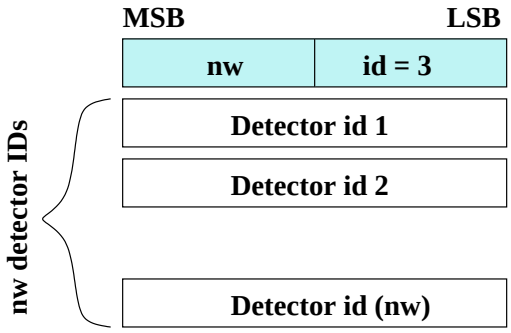

Switched on detectors are in the list only

Detector	ID
MSGC 0	200
MSGC 1	201
MSGC2	202
MSGC 3	203
SciFi	300
dEdX	400

Detector	ID
DC 0	500
DC 1	501
DC 2	502
VH	600
HH	700
PrS	900
Muon	1000
Dummy	1100