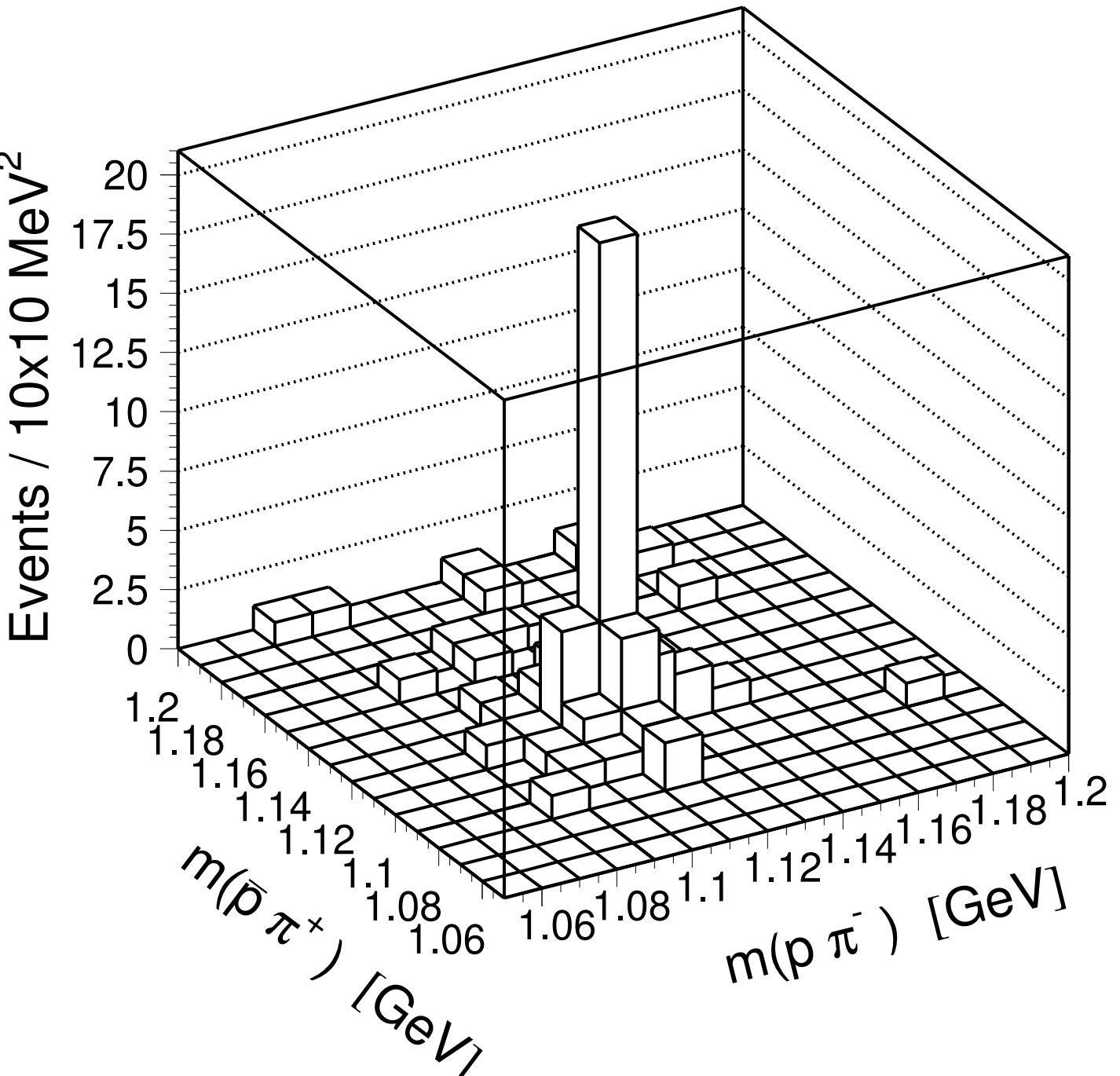
Events / 10x10 MeV^2
20
17.5
15
12.5
10
7.5
5
2.5
0
1.2
1.18
1.16
1.14
1.12
1.1
1.08
1.06
$m(\bar{p}\,\pi^+)$ [GeV]
1.06
1.08
1.1
1.12
1.14
1.16
1.18
1.2
$m(p\,\pi^-)$ [GeV]